Trinity Glass INTERNATIONAL
4621 192nd STREET TACOMA, WA 98446

3'0 X 8'0 GLAZED PREMIUM FIBERGLASS SINGLE DOOR WITH SIDELITE(S) (CHS) INSWING / OUTSWING

"NON-IMPACT"

EVALUATED FOR USE IN THE STATE OF TEXAS

The Trinity Glazed Premium Fiberglass Door with sidelite(s) (CHS) described herein complies with the 2006 International Residential Code (IRC), Sections R301 & R613 and the 2006 International Building Code (IBC), Sections 1405.12, 1609, 1714.5, 2403 and 2404 (including Texas revisions) subject to the following conditions:

1. Anchors shall be as listed and spaced as shown in the details. Anchor embedment to base material shall be beyond wall dressing or stucco.
2. When used in areas requiring wind-borne debris protection this product is required to be protected with an impact resistant covering that complies with Section R301.2.1.2 of the IRC and Section 1609.1.2 of the IBC.
3. Allowable design pressure requirements must be equal to or less than the design pressure rating shown in the design pressure chart, sheet 1 of this drawing.
4. Conditions not covered by this drawing are subject to further engineering analysis.

SUPPORTING DOCUMENTS & EVIDENCE

1. Testing per ASTM E330-02 as performed by Testing Evaluation Laboratories Inc. and reported in test report numbers TEL 08-01370046 and TEL 05-1026-2, signed by Wendell W. Haney, P.E.
2. Calculations (Anchoring and Glass load resistance report ASTM E1300-04) prepared by Lyndon F. Schmidt, P.E.
3. Certificate of Participation issued by the National Accreditation and Management Institute, Inc., certifying that Trinity Glass Int'l is manufacturing products within a Quality Assurance program.

TABLE OF CONTENTS

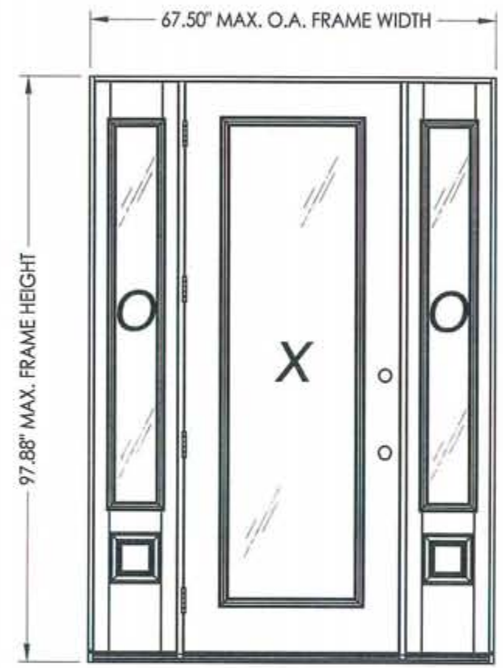

SINGLE DOOR W/ SIDELITES (CHS)

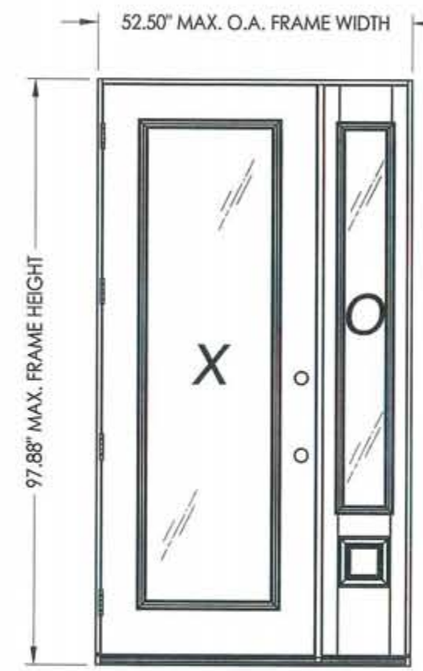

SINGLE DOOR W/ SIDELITE (CHS)

UNIT TYPE	SWING	MAX. FRAME DIMENSION	GLASS TYPE	DESIGN PRESSURE (PSF)	
				POSITIVE	NEGATIVE
SINGLE W/ SIDELITES	INSWING	67.50" x 97.88"	G1	+47.0	-47.0
	OUTSWING	67.50" x 96.75"		+47.0	-47.0
SINGLE W/ SIDELITE	INSWING	52.50" x 97.88"		+47.0	-47.0
	OUTSWING	52.50" x 96.75"		+47.0	-47.0

Refer to Table (sheet 4) for Passage Lock Rating Limitations

STATE OF TEXAS
LYNDON F. SCHMIDT
104123
LICENSED PROFESSIONAL ENGINEER
1-6-10

Documents Prepared By: Lyndon F. Schmidt, P.E.
TEXAS P.E. #104123
RW BUILDING CONSULTANTS, INC.
P.O. Box 230 Valrico FL 33595
Phone No.: 813.659.9197
TEXAS BOARD OF PROFESSIONAL ENGINEERS CERTIFICATE OF REGISTRATION # F-11852

PRODUCT: TRINITY GLASS INT'L PREMIUM LIPLITE FIBERGLASS

PART OR ASSEMBLY: TYPICAL ELEVATION, DESIGN PRESSURES & GENERAL NOTES

REVISIONS

NO.	DATE		BY
3	7/27/09	TDI PRODUCT EVALUATION UPDATE	AL
2	6/28/06	REVISED LOCKSET NOMENCLATURE	EW
1	12/2/05	REVISED ANCHOR LOCATIONS	AEM

DATE: 11/21/05
SCALE: N.T.S.
DWG. BY: AEM
CHK. BY: LFS
DRAWING NO.: TX-719
SHEET 1 OF 11

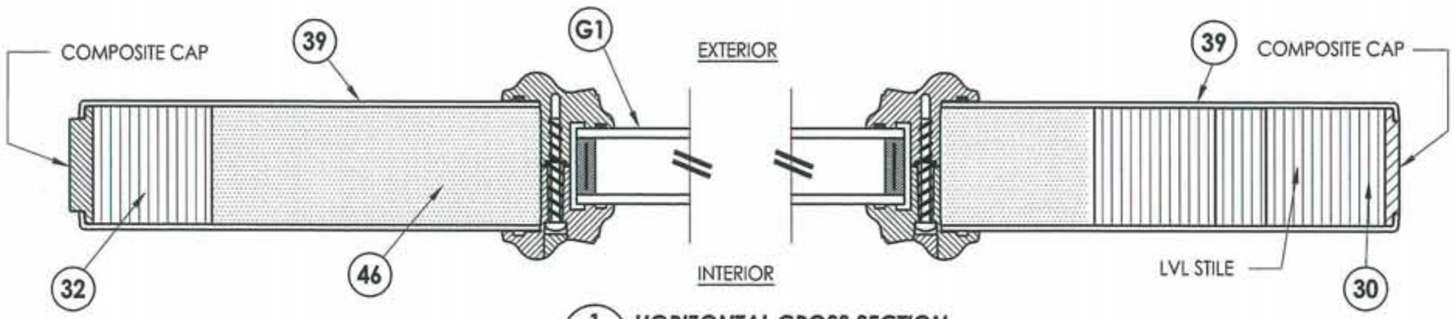

1/2 HORIZONTAL CROSS SECTION

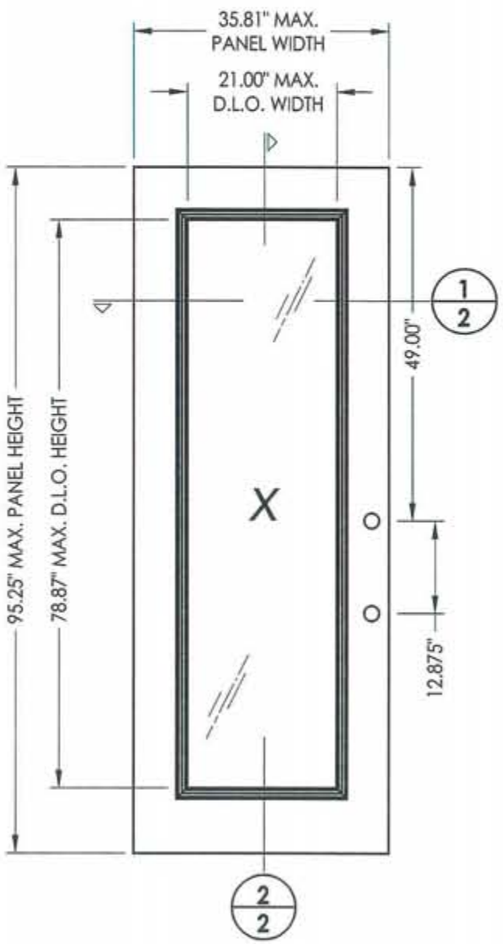

7 PREMIUM LIPLITE FIBERGLASS DOOR

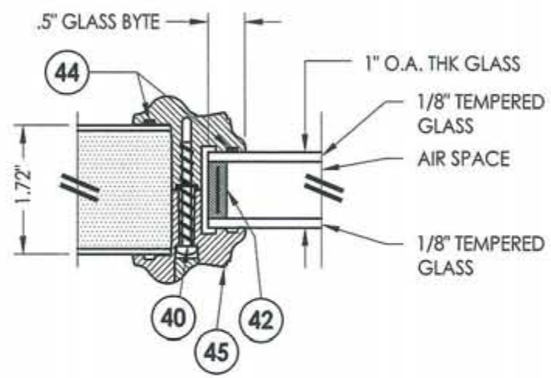

G1 GLAZING DETAIL

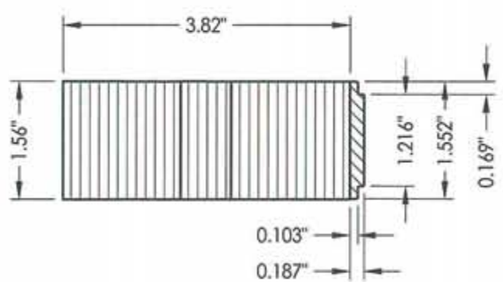

30 LATCH STILE

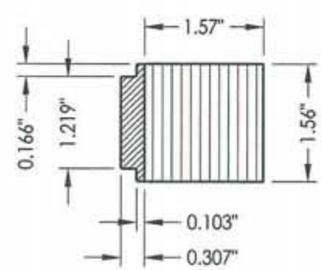

32 HINGE STILE

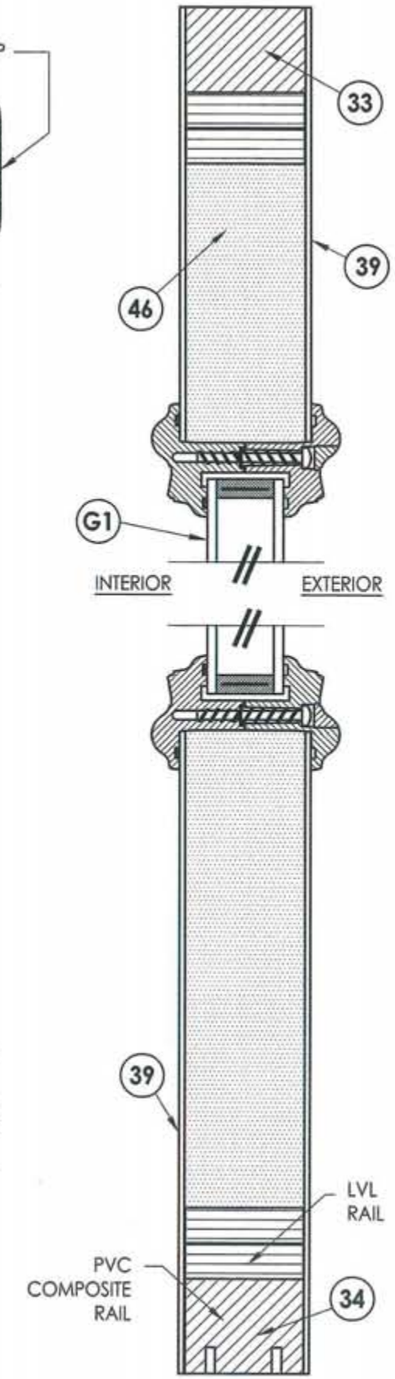

2/2 VERTICAL CROSS SECTION

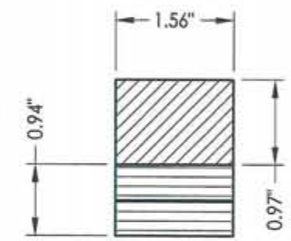

33 TOP RAIL

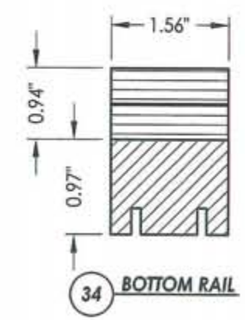

34 BOTTOM RAIL

STATE OF TEXAS
LYNDON F. SCHMIDT
104123
LICENSED PROFESSIONAL ENGINEER
7-6-10

Documents Prepared By: Lyndon F. Schmidt, P.E.
TEXAS P.E. #104123
RW BUILDING CONSULTANTS, INC.
P.O. Box 230 Valrico FL. 33595
Phone No.: 813.659.9197
TEXAS BOARD OF PROFESSIONAL ENGINEERS
CERTIFICATE OF REGISTRATION # F-11852

PRODUCT: TRINITY GLASS INT'L PREMIUM LIPLITE FIBERGLASS

PART OR ASSEMBLY: DOOR PANEL CONSTRUCTION DETAILS AND GLAZING DETAILS

REVISIONS

NO.	DATE		BY
3	7/27/09	TDI PRODUCT EVALUATION UPDATE	AL
2	6/28/06	REVISED LOCKSET NOMENCLATURE	EW
1	12/2/05	REVISED ANCHOR LOCATIONS	AEM

DATE: 11/21/05
SCALE: N.T.S.
DWG. BY: AEM
CHK. BY: LFS
DRAWING NO.: TX-719
SHEET 2 OF 11

R:\A - Projects\Project Folders\Proj 1101 - 1200\pf1160\D. RWBC Drawings\TX-719\TX-719.dwg, 2

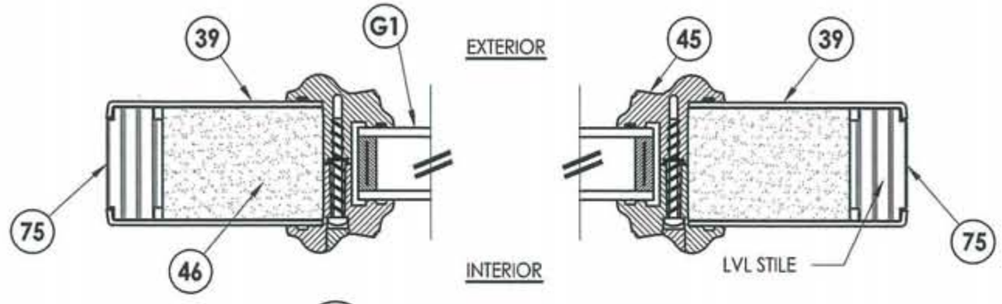

1/3 HORIZONTAL CROSS SECTION

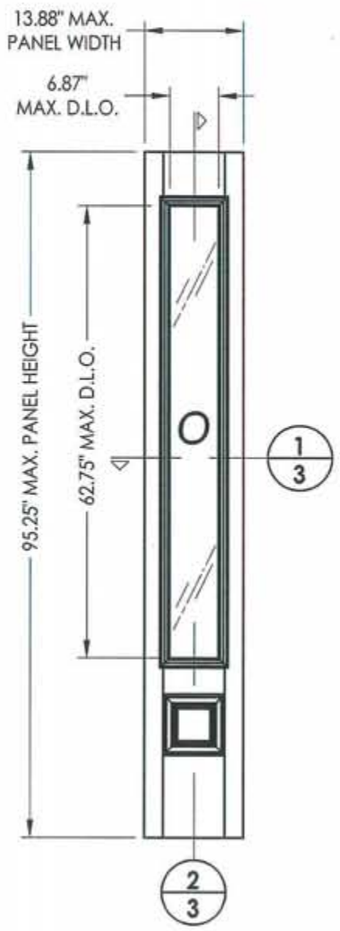

66 PREMIUM LIPLITE FIBERGLASS SIDELITE

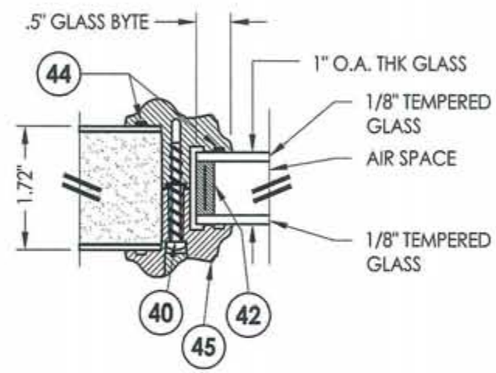

G1 GLAZING DETAIL

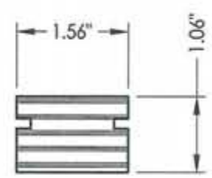

74 73 TOP & BOTTOM RAIL
SIDELITE

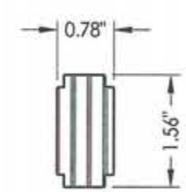

75 SIDELITE STILE

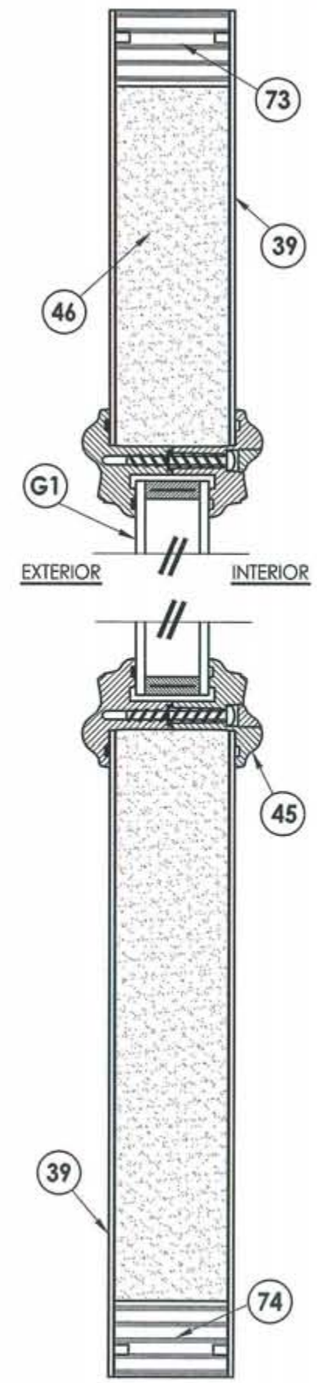

2/3 VERTICAL CROSS SECTION

STATE OF TEXAS
LYNDON F. SCHMIDT
104123
LICENSED PROFESSIONAL ENGINEER

1-6-10

Documents Prepared By: Lyndon F. Schmidt, P.E.
TEXAS P.E. #104123

RW BUILDING CONSULTANTS, INC.
P.O. Box 230 Valrico FL. 33595
Phone No.: 813.659.9197

TEXAS BOARD OF PROFESSIONAL ENGINEERS
CERTIFICATE OF REGISTRATION # F-11852

PRODUCT:
TRINITY GLASS INT'L
PREMIUM LIPLITE FIBERGLASS

PART OR ASSEMBLY:
SIDELITE PANEL CONSTRUCTION
DETAILS AND GLAZING DETAILS

REVISIONS

NO.	DATE	BY
3	7/27/09	AL
2	6/28/06	EW
1	12/2/05	AEM

TDI PRODUCT EVALUATION UPDATE
REVISED LOCKSET NOMENCLATURE
REVISED ANCHOR LOCATIONS

DATE: 11/21/05
SCALE: N.T.S.
DWG. BY: AEM
CHK. BY: LFS
DRAWING NO.: TX-719
SHEET 3 OF 11

R:\A - Projects\Project Folders\Proj 1101 - 1200\pf1160\D. RWBC Drawings\TX-719\TX-719.dwg, 3

NOTE:

1. Sidelite ass'y fastener: 6" from each end and 6 more screws equally spaced between (8 screws total per jamb).

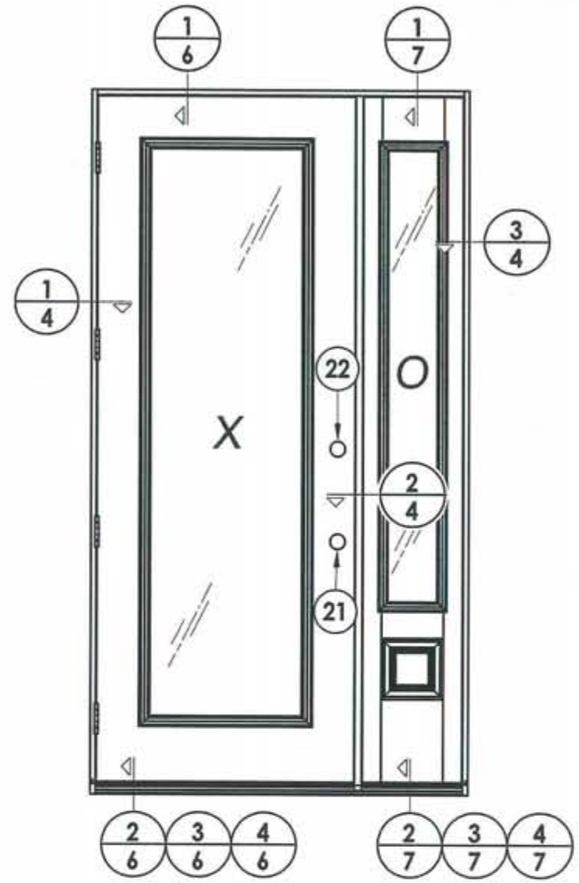

LOCK & DEADBOLT RATINGS CHART				
MANUFACTURER	MODEL	ITEM #	MAX. DESIGN PRESSURE (PSF) POSITIVE	MAX. DESIGN PRESSURE (PSF) NEGATIVE
KWIKSET	LOCK: 740	21	+47.0	-47.0
	DEADBOLT: 780	22		
KWIKSET	LOCK: COMBO 660	21	+47.0	-47.0
	DEADBOLT: COMBO 660	22		
SCHLAGE	LOCK: MAX. SECURITY	21	+47.0	-47.0
	DEADBOLT: MAX. SECURITY	22		

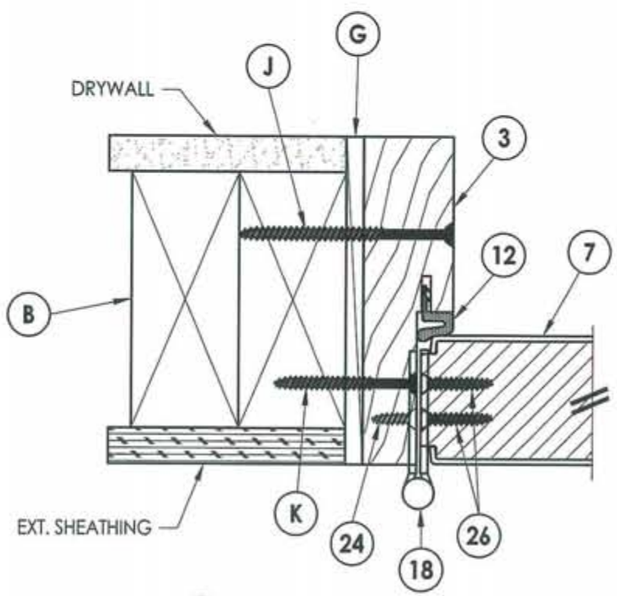

1/3 **HORIZONTAL CROSS SECTION**
Outswing shown
Inswing also approved

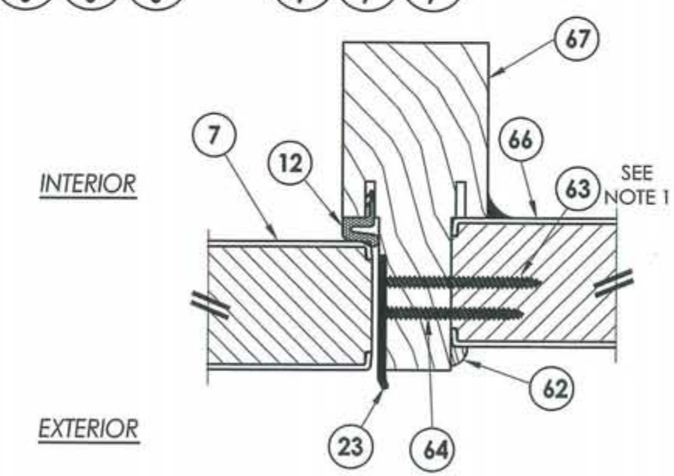

2/4 **HORIZONTAL CROSS SECTION**
Outswing shown
Inswing also approved

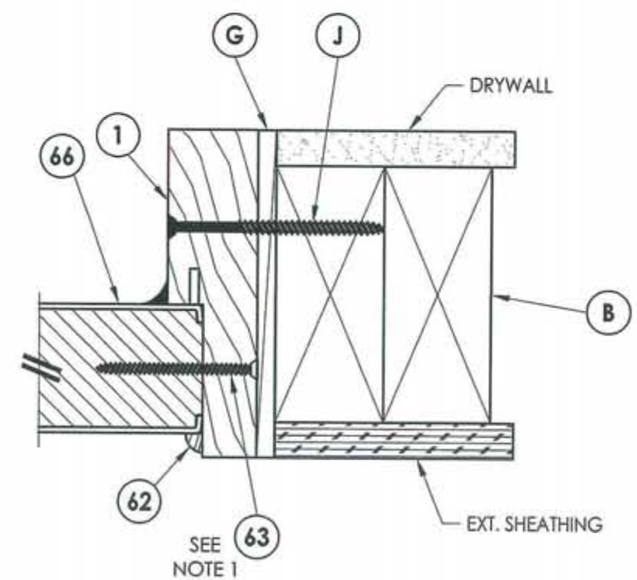

3/4 **HORIZONTAL CROSS SECTION**
Outswing shown
Inswing also approved

STATE OF TEXAS
LYNDON F. SCHMIDT
104123
LICENSED PROFESSIONAL ENGINEER
1-6-10

Documents Prepared By: Lyndon F. Schmidt, P.E. TEXAS P.E. #104123
RW BUILDING CONSULTANTS, INC.
P.O. Box 230 Valrico FL. 33595
Phone No.: 813.659.9197
TEXAS BOARD OF PROFESSIONAL ENGINEERS CERTIFICATE OF REGISTRATION # F-11852

PRODUCT: TRINITY GLASS INT'L PREMIUM LIPLITE FIBERGLASS
PART OR ASSEMBLY: HORIZONTAL CROSS SECTIONS

REVISIONS

NO.	DATE	BY
3	7/27/09 TDI PRODUCT EVALUATION UPDATE	AL
2	6/28/06 REVISED LOCKSET NOMENCLATURE	EW
1	12/2/05 REVISED ANCHOR LOCATIONS	AEM

DATE: 11/21/05
SCALE: N.T.S.
DWG. BY: AEM
CHK. BY: LFS
DRAWING NO.: TX-719
SHEET 4 OF 11

R:\A - Projects\Project Folders\Proj 1101 - 1200\pf1160\D. RWBC Drawings\TX-719\TX-719.dwg, 4

NOTE:

1. Sidelite ass'y fastener: 6" from each end and 6 more screws equally spaced between (8 screws total per jamb).
2. Refer to Table (sheet 4) for Passage Lock Rating Limitations

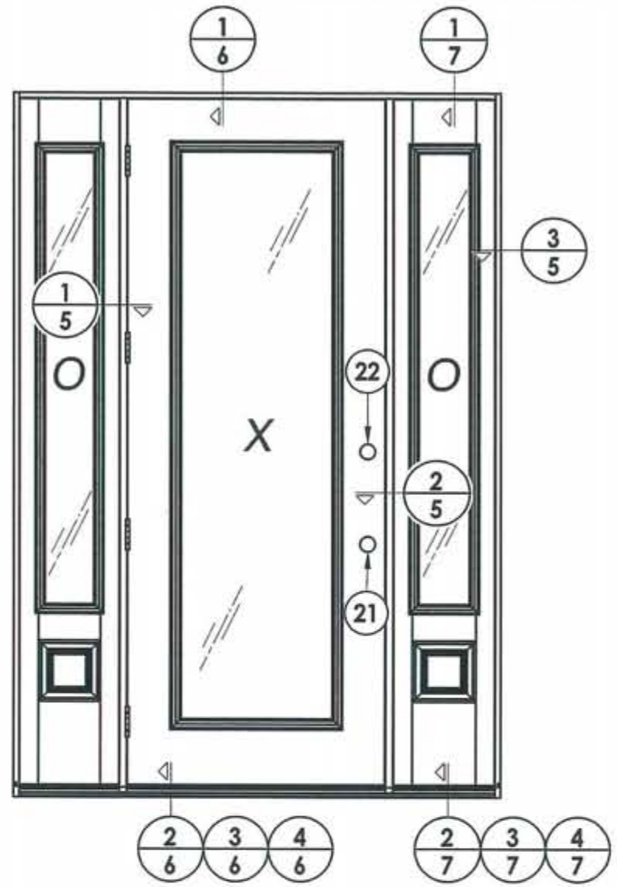

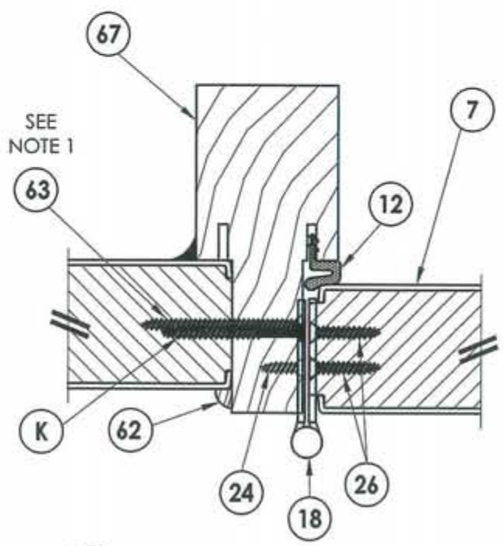

INTERIOR

EXTERIOR

1/5 HORIZONTAL CROSS SECTION
Outswing shown
Inswing also approved

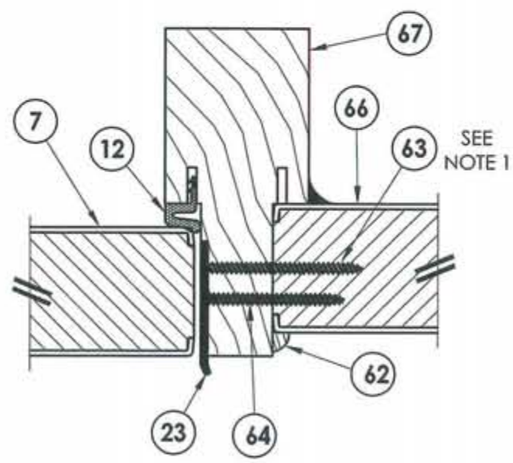

INTERIOR

EXTERIOR

2/5 HORIZONTAL CROSS SECTION
Outswing shown
Inswing also approved

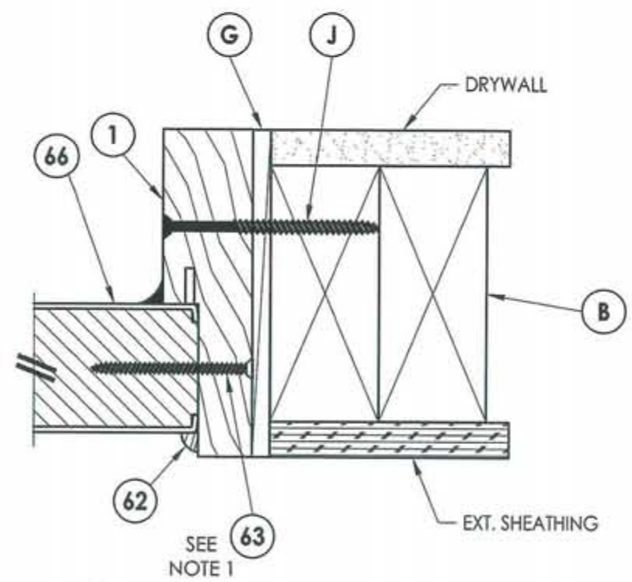

3/5 HORIZONTAL CROSS SECTION
Outswing shown
Inswing also approved

STATE OF TEXAS
LYNDON F. SCHMIDT
104123
LICENSED PROFESSIONAL ENGINEER
1-6-10

Documents Prepared By: Lyndon F. Schmidt, P.E.
TEXAS P.E. #104123

RW BUILDING CONSULTANTS, INC.
P.O. Box 230 Valrico FL. 33595
Phone No.: 813.659.9197

TEXAS BOARD OF PROFESSIONAL ENGINEERS
CERTIFICATE OF REGISTRATION # F-11852

PRODUCT: TRINITY GLASS INT'L PREMIUM LIPLITE FIBERGLASS

PART OR ASSEMBLY: HORIZONTAL CROSS SECTION

REVISIONS

NO.	DATE		BY
3	7/27/09	TDI PRODUCT EVALUATION UPDATE	AL
2	6/28/06	REVISED LOCKSET NOMENCLATURE	EW
1	12/2/05	REVISED ANCHOR LOCATIONS	AEM

DATE: 11/21/05
SCALE: N.T.S.
DWG. BY: AEM
CHK. BY: LFS
DRAWING NO.: TX-719
SHEET 5 OF 11

R:\A - Projects\Project Folders\Proj 1101 - 1200\pf1160\D. RWBC Drawings\TX-719\TX-719.dwg, 5

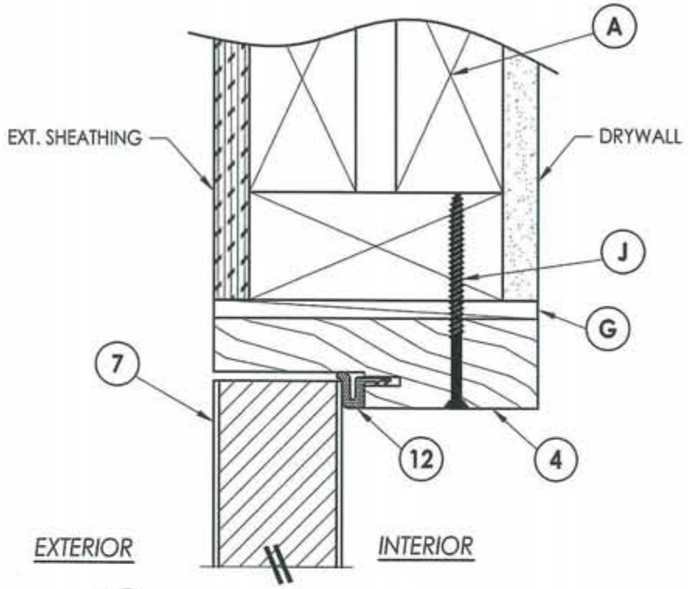

1/6 **VERTICAL CROSS SECTION**
Outswing shown
Inswing also approved

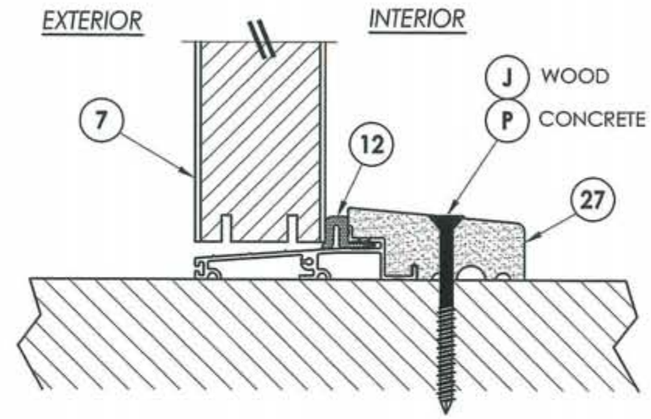

2/6 **VERTICAL CROSS SECTION**
Outswing configuration

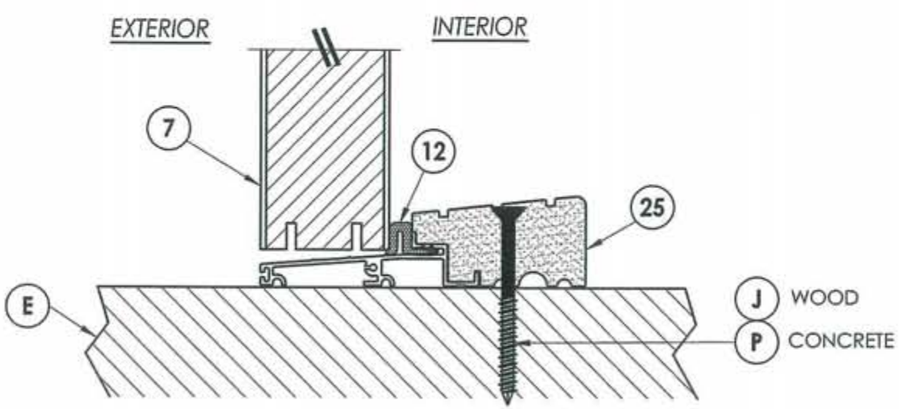

3/6 **VERTICAL CROSS SECTION**
Outswing configuration

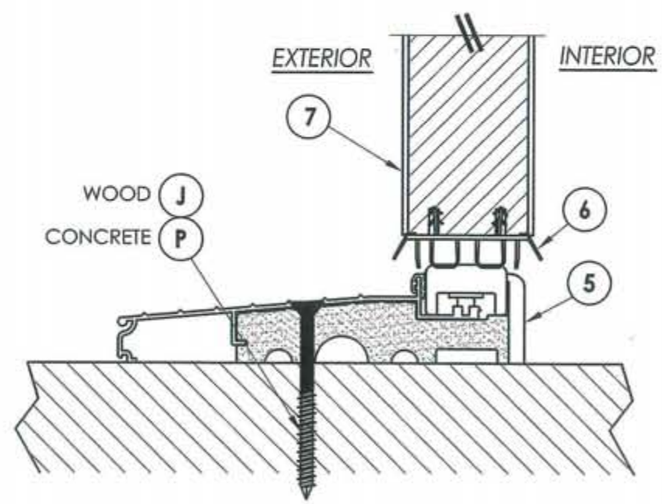

4/6 **VERTICAL CROSS SECTION**
Inswing configuration

STATE OF TEXAS
LYNDON F. SCHMIDT
104123
LICENSED PROFESSIONAL ENGINEER
7-6-10

Documents Prepared By: Lyndon F. Schmidt, P.E.
TEXAS P.E. #104123

RW BUILDING CONSULTANTS, INC.
P.O. Box 230 Valrico FL. 33595
Phone No.: 813.659.9197

TEXAS BOARD OF PROFESSIONAL ENGINEERS
CERTIFICATE OF REGISTRATION # F-11852

PRODUCT: TRINITY GLASS INT'L. PREMIUM LIPLITE FIBERGLASS

PART OR ASSEMBLY: VERTICAL CROSS SECTIONS

NO.	DATE	REVISIONS	BY
3	7/27/09	TDI PRODUCT EVALUATION UPDATE	AL
2	6/28/06	REVISED LOCKSET NOMENCLATURE	EW
1	12/2/05	REVISED ANCHOR LOCATIONS	AEM

DATE: 11/21/05
SCALE: N.T.S.
DWG. BY: AEM
CHK. BY: LFS
DRAWING NO.: TX-719
SHEET 6 OF 11

R:\A - Projects\Project Folders\Proj 1101 - 1200\pf1160\D. RWBC Drawings\TX-719\TX-719.dwg, 6

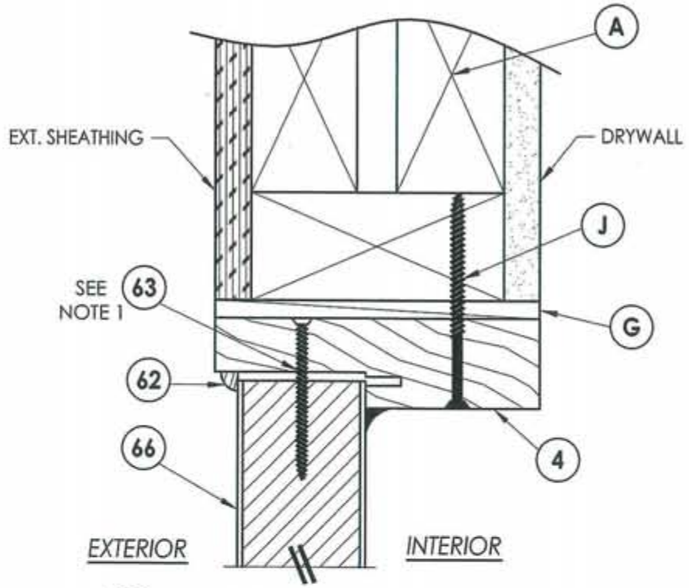

1/7 **VERTICAL CROSS SECTION**

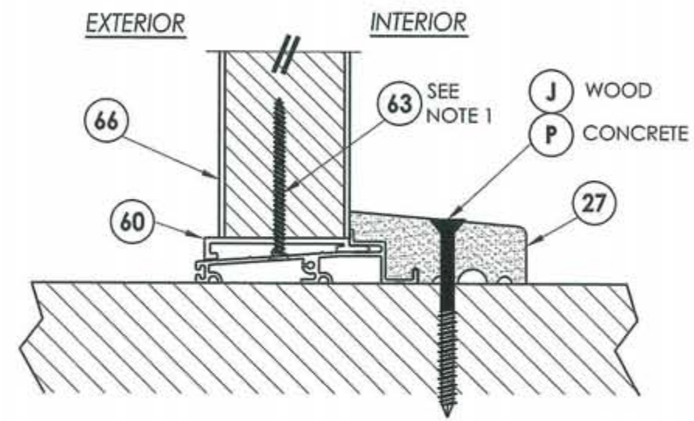

2/7 **VERTICAL CROSS SECTION**
Outswing sill

NOTE:

1. Screws thru head and sill jamb located 3" from each end and on center line.

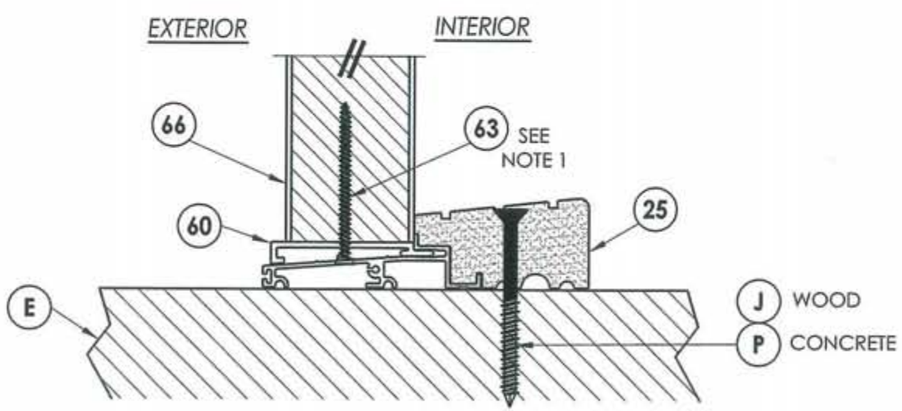

3/7 **VERTICAL CROSS SECTION**
Outswing sill - high dam

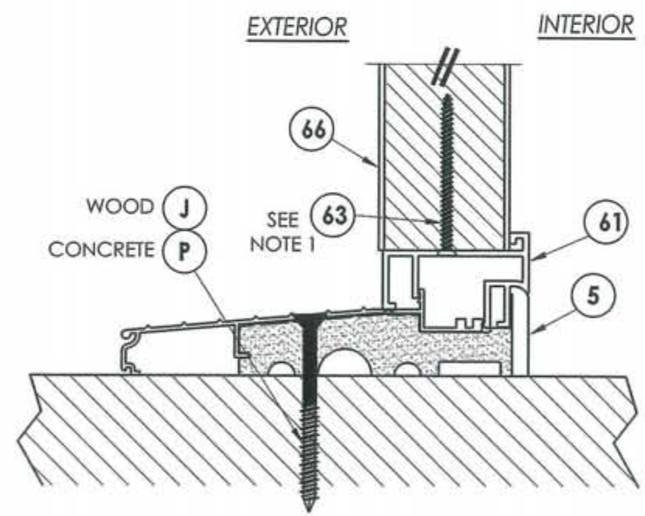

4/7 **VERTICAL CROSS SECTION**
Inswing sill

STATE OF TEXAS
LYNDON F. SCHMIDT
104123
LICENSED PROFESSIONAL ENGINEER
1-6-10

Documents Prepared By: Lyndon F. Schmidt, P.E.
TEXAS P.E. #104123

RW BUILDING CONSULTANTS, INC.
P.O. Box 230 Valrico FL. 33595
Phone No.: 813.659.9197

TEXAS BOARD OF PROFESSIONAL ENGINEERS
CERTIFICATE OF REGISTRATION # F-11852

PRODUCT: TRINITY GLASS INT'L PREMIUM LIPLITE FIBERGLASS

PART OR ASSEMBLY: VERTICAL CROSS SECTIONS

REVISIONS

NO.	DATE	BY
3	7/27/09	TDI PRODUCT EVALUATION UPDATE AL
2	6/28/06	REVISED LOCKSET NOMENCLATURE EW
1	12/2/05	REVISED ANCHOR LOCATIONS AEM

DATE: 11/21/05
SCALE: N.T.S.
DWG. BY: AEM
CHK. BY: LFS
DRAWING NO.: TX-719
SHEET 7 OF 11

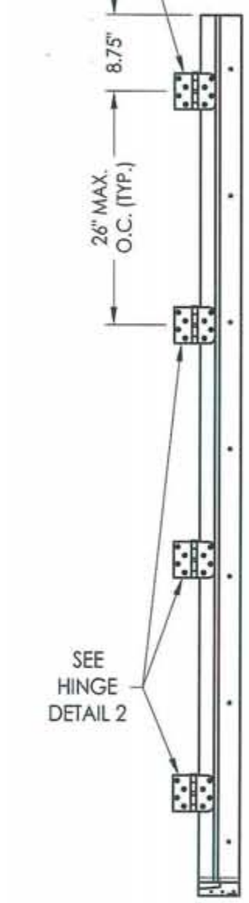

HINGE JAMB

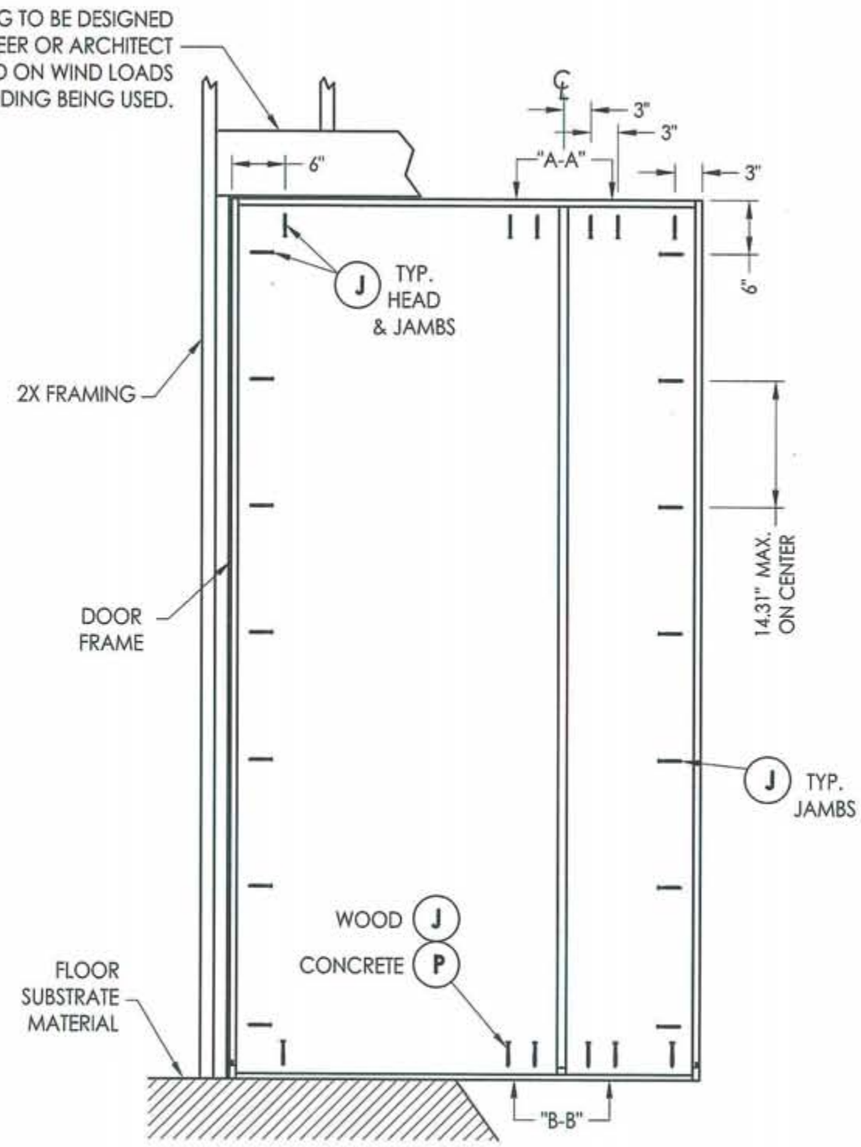

FRAME ANCHORING
Stud construction

STRIKE MULLION

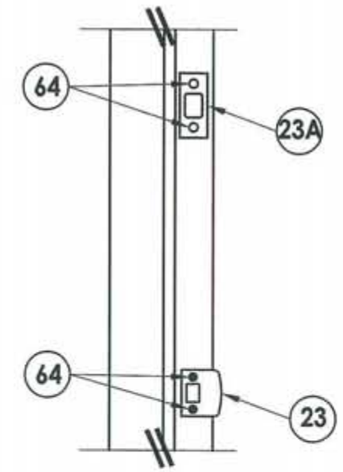

STRIKE PLATE DETAIL

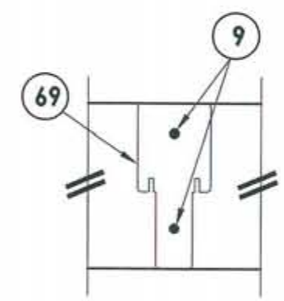

VIEW A-A
Head to mullion attachment

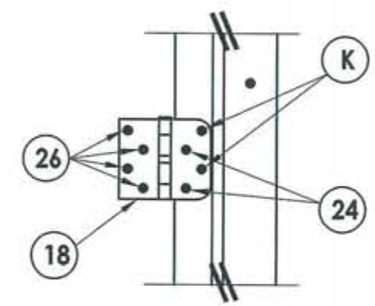

HINGE DETAIL 1

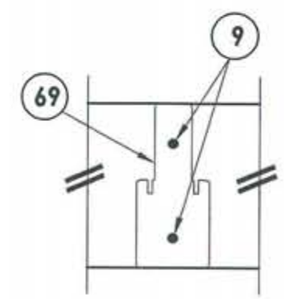

VIEW B-B
Sill to mullion attachment

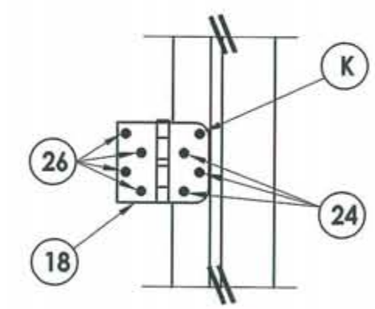

HINGE DETAIL 2

STATE OF TEXAS
LYNDON F. SCHMIDT
104123
LICENSED PROFESSIONAL ENGINEER
1-6-10

Documents Prepared By: Lyndon F. Schmidt, P.E. TEXAS P.E. #104123

RW BUILDING CONSULTANTS, INC.
P.O. Box 230 Valrico FL. 33595
Phone No.: 813.659.9197

TEXAS BOARD OF PROFESSIONAL ENGINEERS CERTIFICATE OF REGISTRATION # F-11852

PRODUCT: TRINITY GLASS INT'L PREMIUM LIPLITE FIBERGLASS

PART OR ASSEMBLY: FRAME ANCHORING (XO)

NO.	DATE	REVISIONS	BY
3	7/27/09	TDI PRODUCT EVALUATION UPDATE	AL
2	6/28/06	REVISED LOCKSET NOMENCLATURE	EW
1	12/2/05	REVISED ANCHOR LOCATIONS	AEM

DATE: 11/21/05
SCALE: N.T.S.
DWG. BY: AEM
CHK. BY: LFS
DRAWING NO.: TX-719
SHEET 8 OF 11

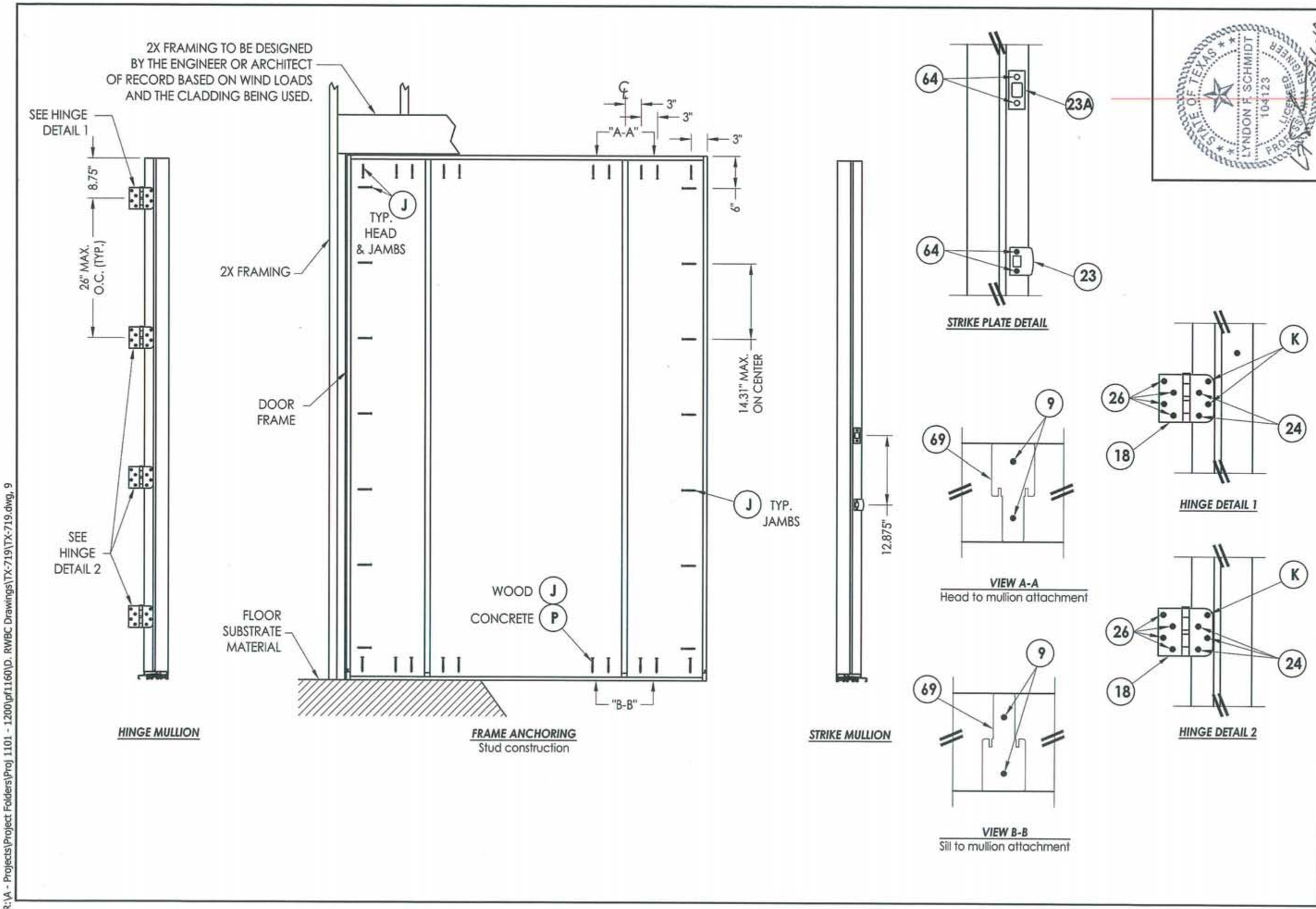
2X FRAMING TO BE DESIGNED BY THE ENGINEER OR ARCHITECT OF RECORD BASED ON WIND LOADS AND THE CLADDING BEING USED.
SEE HINGE DETAIL 1
8.75"
26" MAX. O.C. (TYP.)
SEE HINGE DETAIL 2
HINGE MULLION
2X FRAMING
DOOR FRAME
FLOOR SUBSTRATE MATERIAL
TYP. HEAD & JAMBS
J
"A-A"
3"
3"
3"
6"
14.31" MAX. ON CENTER
J TYP. JAMBS
WOOD J
CONCRETE P
"B-B"
FRAME ANCHORING
Stud construction
12.875"
STRIKE MULLION
64
23A
64
23
STRIKE PLATE DETAIL
9
69
VIEW A-A
Head to mullion attachment
9
69
VIEW B-B
Sill to mullion attachment
K
26
24
18
HINGE DETAIL 1
K
26
24
18
HINGE DETAIL 2
STATE OF TEXAS
LYNDON F. SCHMIDT
104123
LICENSED PROFESSIONAL ENGINEER
7-6-10
Documents Prepared By: Lyndon F. Schmidt, P.E. TEXAS P.E. #104123
RW BUILDING CONSULTANTS, INC.
P.O. Box 230 Valrico FL. 33595
Phone No.: 813.659.9197
TEXAS BOARD OF PROFESSIONAL ENGINEERS CERTIFICATE OF REGISTRATION # F-11852
PRODUCT: TRINITY GLASS INT'L PREMIUM LIPLITE FIBERGLASS
PART OR ASSEMBLY: FRAME ANCHORING (OXO)
NO. DATE BY REVISIONS
3 7/27/09 AL TDI PRODUCT EVALUATION UPDATE
2 6/28/06 EW REVISED LOCKSET NOMENCLATURE
1 12/2/05 AEM REVISED ANCHOR LOCATIONS
DATE: 11/21/05
SCALE: N.T.S.
DWG. BY: AEM
CHK. BY: LFS
DRAWING NO.: TX-719
SHEET 9 OF 11
© 2009 R.W. BUILDING CONSULTANTS INC.
R:\A - Projects\Project Folders\Proj 1101 - 1200\pf1160\D. RWBC Drawings\TX-719\TX-719.dwg, 9

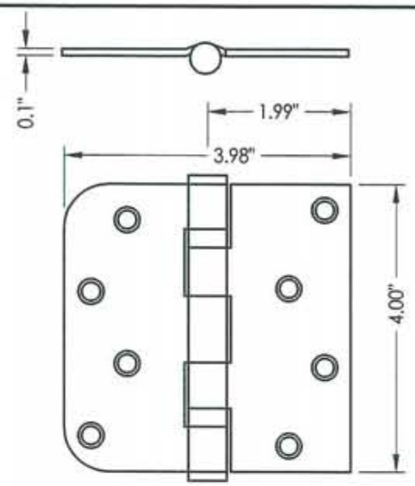

18 HINGE

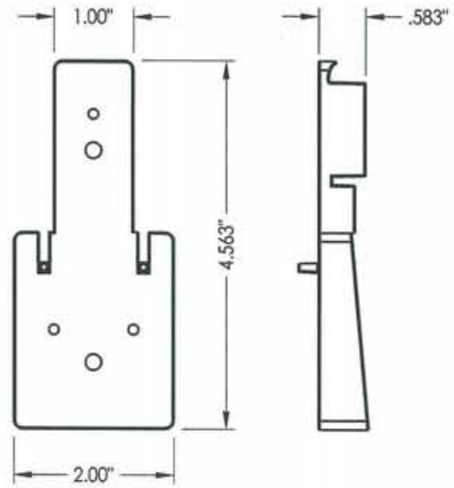

69 MULLION BASE KIT
Optional

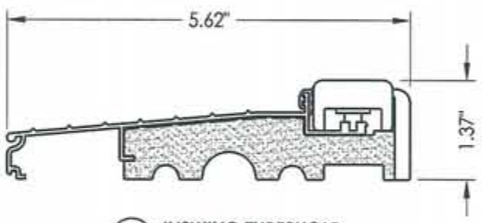

5 INSWING THRESHOLD

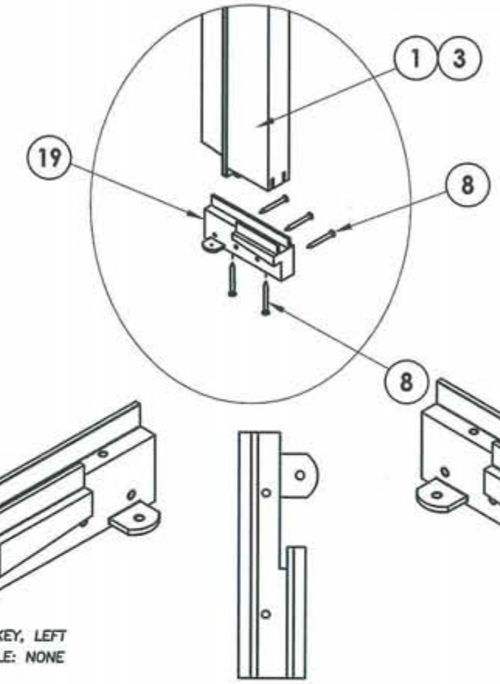

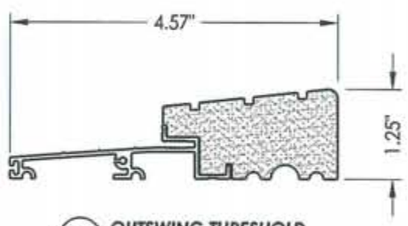

25 OUTSWING THRESHOLD
High-dam option

6 DOOR BOTTOM SWEEP

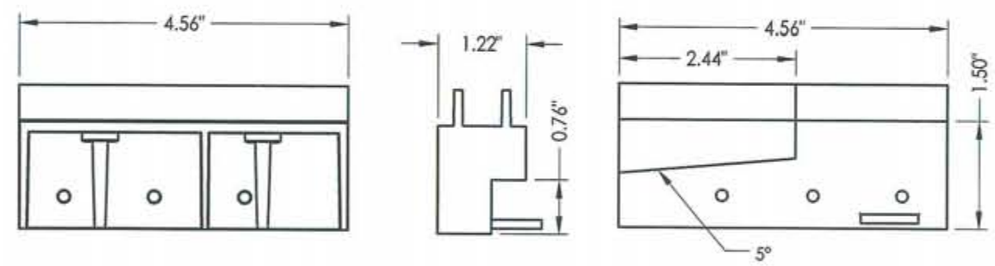

19 SILLKEY DETAILS
Optional

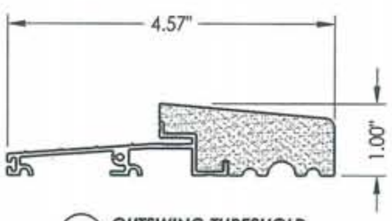

27 OUTSWING THRESHOLD

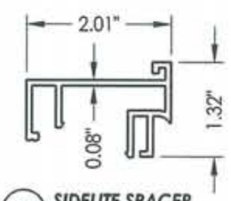

61 SIDELITE SPACER
Inswing

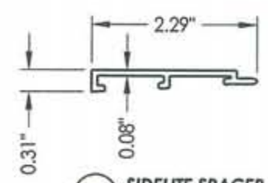

60 SIDELITE SPACER
Outswing

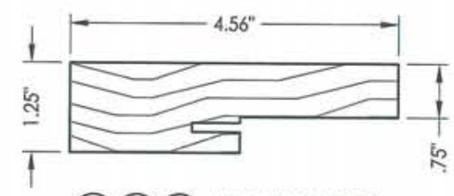

4 3 1 SIDE & HEAD JAMBS

STATE OF TEXAS
LYNDON F. SCHMIDT
104123
LICENSED
PROFESSIONAL ENGINEER
2-5-10

Documents Prepared By: Lyndon F. Schmidt, P.E.
TEXAS P.E. #104123

RW BUILDING CONSULTANTS, INC.
P.O. Box 230 Valrico FL. 33595
Phone No.: 813.659.9197

TEXAS BOARD OF PROFESSIONAL ENGINEERS
CERTIFICATE OF REGISTRATION # F-11852

PRODUCT: TRINITY GLASS INT'L PREMIUM LIPLITE FIBERGLASS

PART OR ASSEMBLY: COMPONENTS

NO.	DATE	REVISIONS	BY
3	7/27/09	TDI PRODUCT EVALUATION UPDATE	AL
2	6/28/06	REVISED LOCKSET NOMENCLATURE	EW
1	12/2/05	REVISED ANCHOR LOCATIONS	AEM

DATE: 11/21/05
SCALE: N.T.S.
DWG. BY: AEM
CHK. BY: LFS
DRAWING NO.: TX-719
SHEET 10 OF 11

R:\A - Projects\Project Folders\Proj 1101 - 1200\pf1160\D. RWBC Drawings\TX-719\TX-719.dwg, 10

BILL OF MATERIALS

ITEM	DESCRIPTION	MATERIAL
A	2X HEADER FRAMING SG >= 0.42	WOOD
B	2X FRAMING SG >= 0.42	WOOD
G	MAX. 1/4" SHIM SPACE	WOOD
J	#10 X 3" PFH WS	STEEL
K	#9 X 2" PFH WS	STEEL
P	3/16" X 2-3/4" ELCO OR ITW PFH CONCRETE SCREW	STEEL
1	SIDELITE JAMB - FINGER-JOINT PINE - SG >= 0.42	WOOD
3	HINGE JAMB - FINGER-JOINT PINE - SG >= 0.42	WOOD
4	HEAD - FINGER-JOINT PINE - SG >= 0.42	WOOD
5	INSWING THRESHOLD ALUMINUM W/ COMPOSITE SUBSTRATE	ALUMINUM
6	DOOR BOTTOM SWEEP	PVC
7	DOOR PANEL - SEE DOOR PANEL DETAIL SHEET FOR CONSTRUCTION DETAILS	-
8	#6 X 1-1/4" PFH DRYWALL SCREW	STEEL
9	#9 X 2-1/4" PFH WOOD SCREW	STEEL
12	WEATHER STRIP QEBD650 Q-LON	-
18	3.983" X 4" HINGE MIN 0.098" THICK	STEEL
19	SILLKEY	PC/ASA
21	LOCK (SEE LOCK & DEADBOLT RATINGS CHART)	STEEL
22	DEADBOLT (SEE LOCK & DEADBOLT RATINGS CHART)	STEEL
23	STRIKE PLATE	STEEL
23A	DEADBOLT PLATE	STEEL
24	#9 X 5/8" PFH SCREW	STEEL
25	OUTSWING HIGH-DAM THRESHOLD ALUMINUM W/ COMPOSITE SUBSTRATE	ALUM./ COMP.
26	#9 X 1" PFH SCREW	STEEL
27	OUTSWING THRESHOLD ALUMINUM W/ COMPOSITE SUBSTRATE	ALUM./ COMP.
30	LATCH STILE - SG >= 0.42	LVL/PVC
32	HINGE STILE - SG >= 0.42	LVL/PVC
33	TOP RAIL - POPLAR LVL & WPC COMBINATION	POPLAR/WPC
34	BOTTOM RAIL - POPLAR LVL & WPC COMBINATION	POPLAR/WPC
39	FIBERGLASS SKIN 0.079" MIN. THICKNESS (Fy = 5,203 PSI MIN.)	FIBERGLASS
40	#8 X 1-1/8" SELF THREADING SCREW	STEEL
42	ALUMINUM & BUTYL SPACER SYSTEM	ALUM./BUTYL
44	HOT MELT SEALANT / SILICONE	-
45	LITE FRAME	PC/ASA
46	INSULATING FOAM CORE	POLYURETHANE
60	SIDELITE SPACER - OUTSWING	PVC
61	SIDELITE SPACER - INSWING	PVC
62	QUARTER ROUND	WOOD
63	#8 X 2-1/4" PFH SCREW	STEEL
64	#8 X 2" PFH SCREW	STEEL
66	SIDELITE PANEL - SEE SIDELITE PANEL DETAIL SHEET FOR CONSTRUCTION DETAILS	-
67	INTEGRAL MULLION - FINGER JOINT PINE (SG >= 0.42)	WOOD
69	MULLION BASE KIT	PC/ASA
73	LVL SIDELITE TOP RAIL	POPLAR
74	LVL SIDELITE BOTTOM RAIL	POPLAR
75	LVL SIDELITE STILE	POPLAR

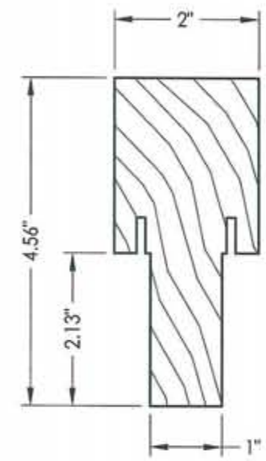

67 INTEGRAL MULLION

CONCRETE ANCHOR NOTES:

1. *Substitution of equal concrete anchors from a different supplier may have different edge distance and center distance requirements.*
2. *Concrete anchor locations at the corners may be adjusted to maintain the min. edge distance to mortar joints. If concrete anchor locations noted as "MAX. ON CENTER" must be adjusted to maintain the min. edge distance to mortar joints, additional concrete anchors may be required to ensure the "MAX. ON CENTER" dimensions are not exceeded.*
3. *Concrete anchor table:*

ANCHOR TYPE	ANCHOR SIZE	MIN. EMBEDMENT	MIN. CLEARANCE TO MASONRY EDGE	MIN. CLEARANCE TO ADJACENT ANCHOR
ITW	3/16"	1-3/4"	2-5/8"	2-1/4"
ELCO	3/16"	1-3/4"	1"	3"

STATE OF TEXAS — LYNDON F. SCHMIDT — 104123 — LICENSED PROFESSIONAL ENGINEER — 6.10

Documents Prepared By: Lyndon F. Schmidt, P.E.
TEXAS P.E. #104123

RW BUILDING CONSULTANTS, INC.
P.O. Box 230 Valrico FL. 33595
Phone No.: 813.659.9197

TEXAS BOARD OF PROFESSIONAL ENGINEERS
CERTIFICATE OF REGISTRATION # F-11652

PRODUCT: TRINITY GLASS INT'L PREMIUM LIPLITE FIBERGLASS

PART OR ASSEMBLY: BILL OF MATERIALS

REVISIONS

NO.	DATE		BY
3	7/27/09	TDI PRODUCT EVALUATION UPDATE	AL
2	6/28/06	REVISED LOCKSET NOMENCLATURE	EW
1	12/2/05	REVISED ANCHOR LOCATIONS	AEM

DATE: 11/21/05
SCALE: N.T.S.
DWG. BY: AEM
CHK. BY: LFS
DRAWING NO.: TX-719
SHEET 11 OF 11